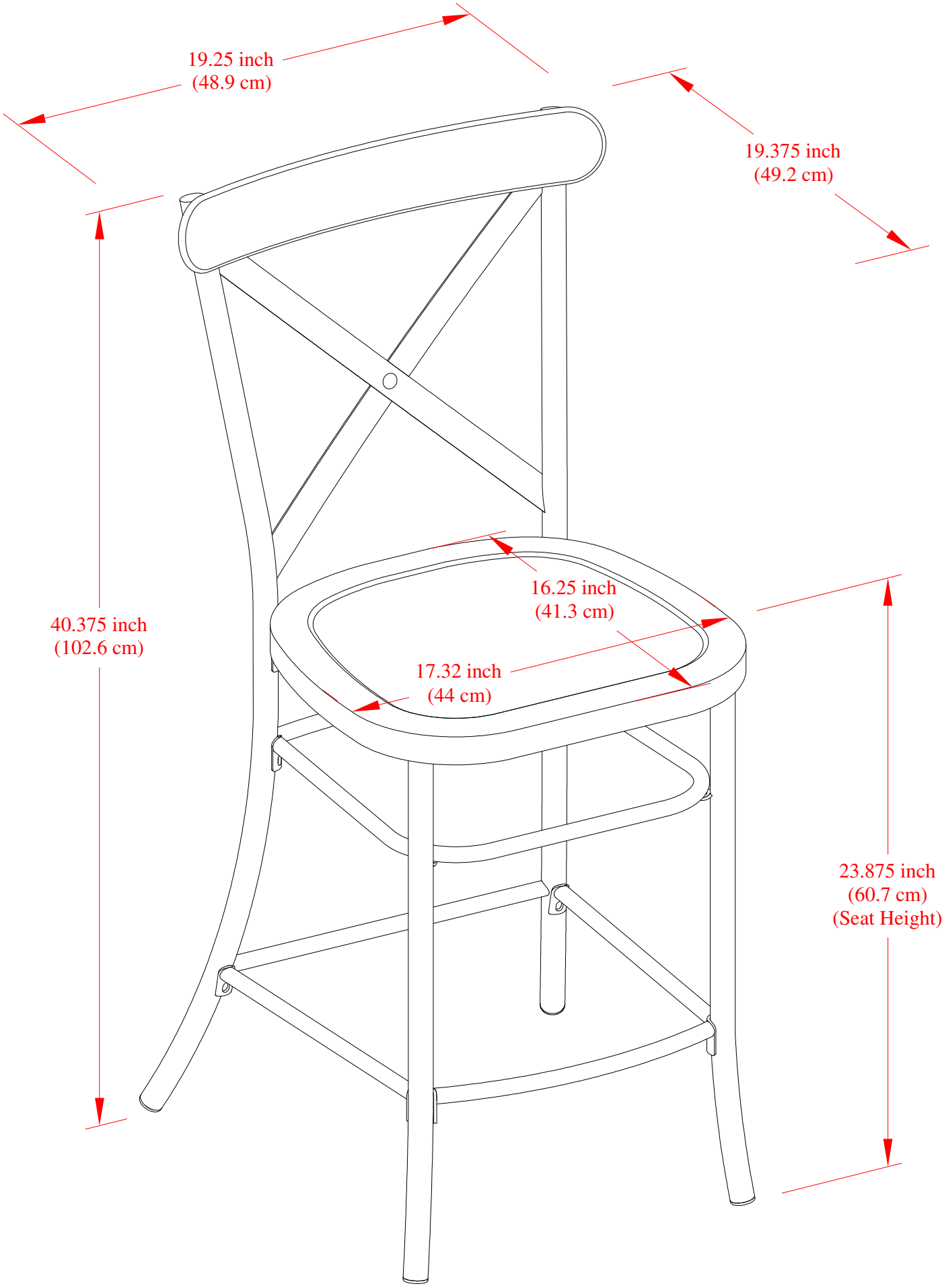
19.25 inch
(48.9 cm)
19.375 inch
(49.2 cm)
40.375 inch
(102.6 cm)
16.25 inch
(41.3 cm)
17.32 inch
(44 cm)
23.875 inch
(60.7 cm)
(Seat Height)