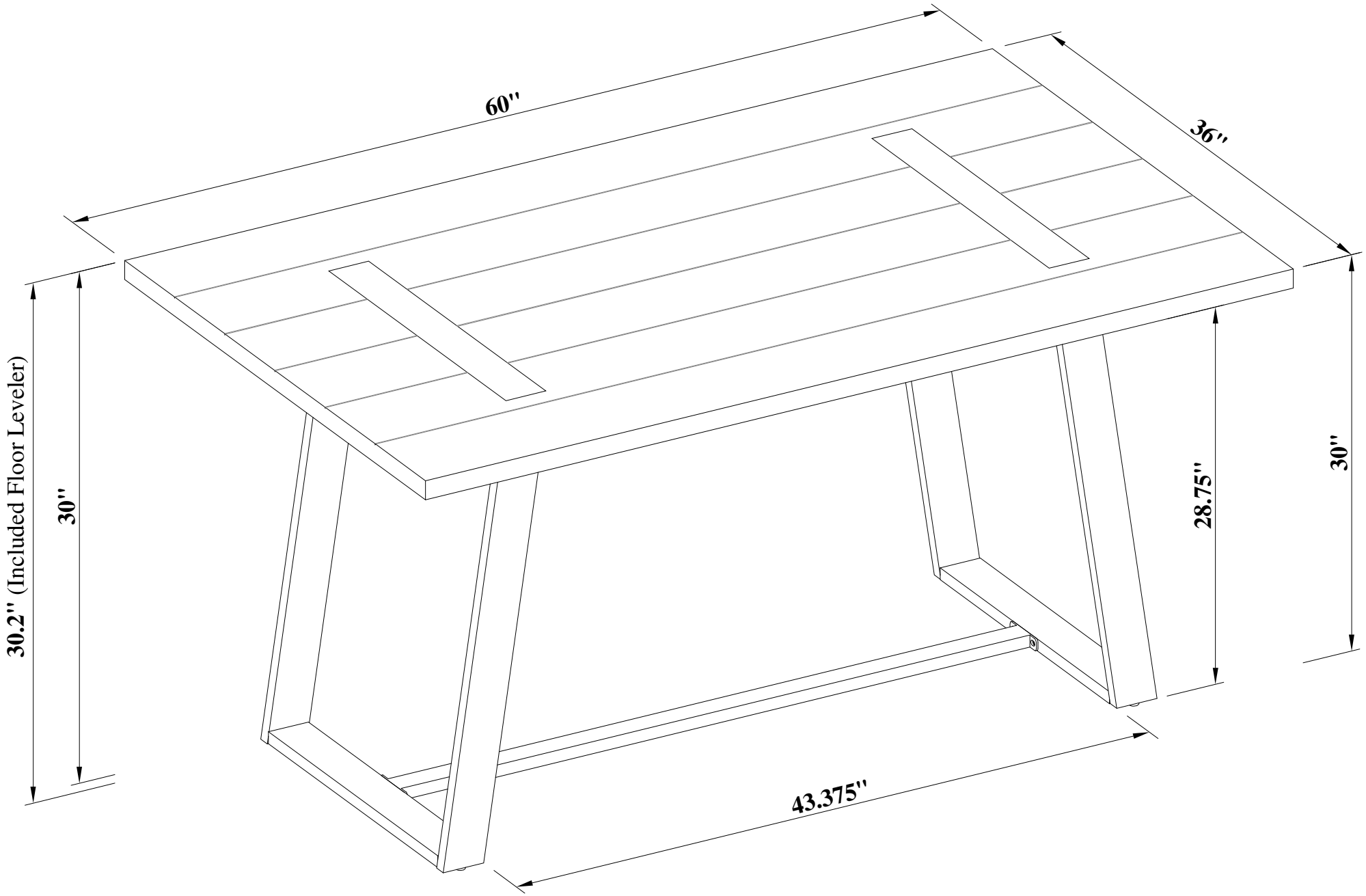
60''
36''
30.2'' (Included Floor Leveler)
30''
28.75''
30''
43.375''