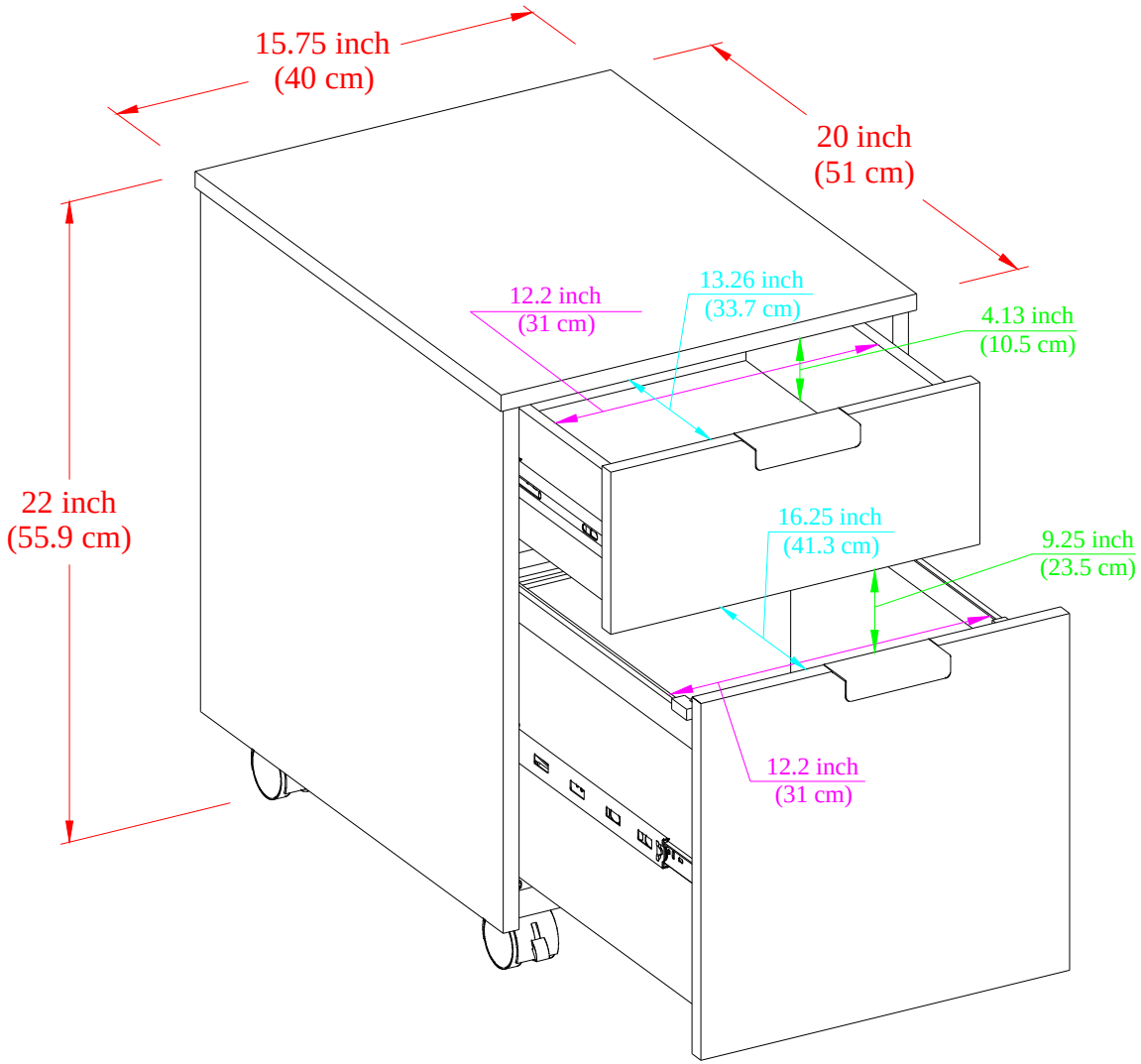
15.75 inch
(40 cm)
20 inch
(51 cm)
22 inch
(55.9 cm)
12.2 inch
(31 cm)
13.26 inch
(33.7 cm)
4.13 inch
(10.5 cm)
16.25 inch
(41.3 cm)
9.25 inch
(23.5 cm)
12.2 inch
(31 cm)