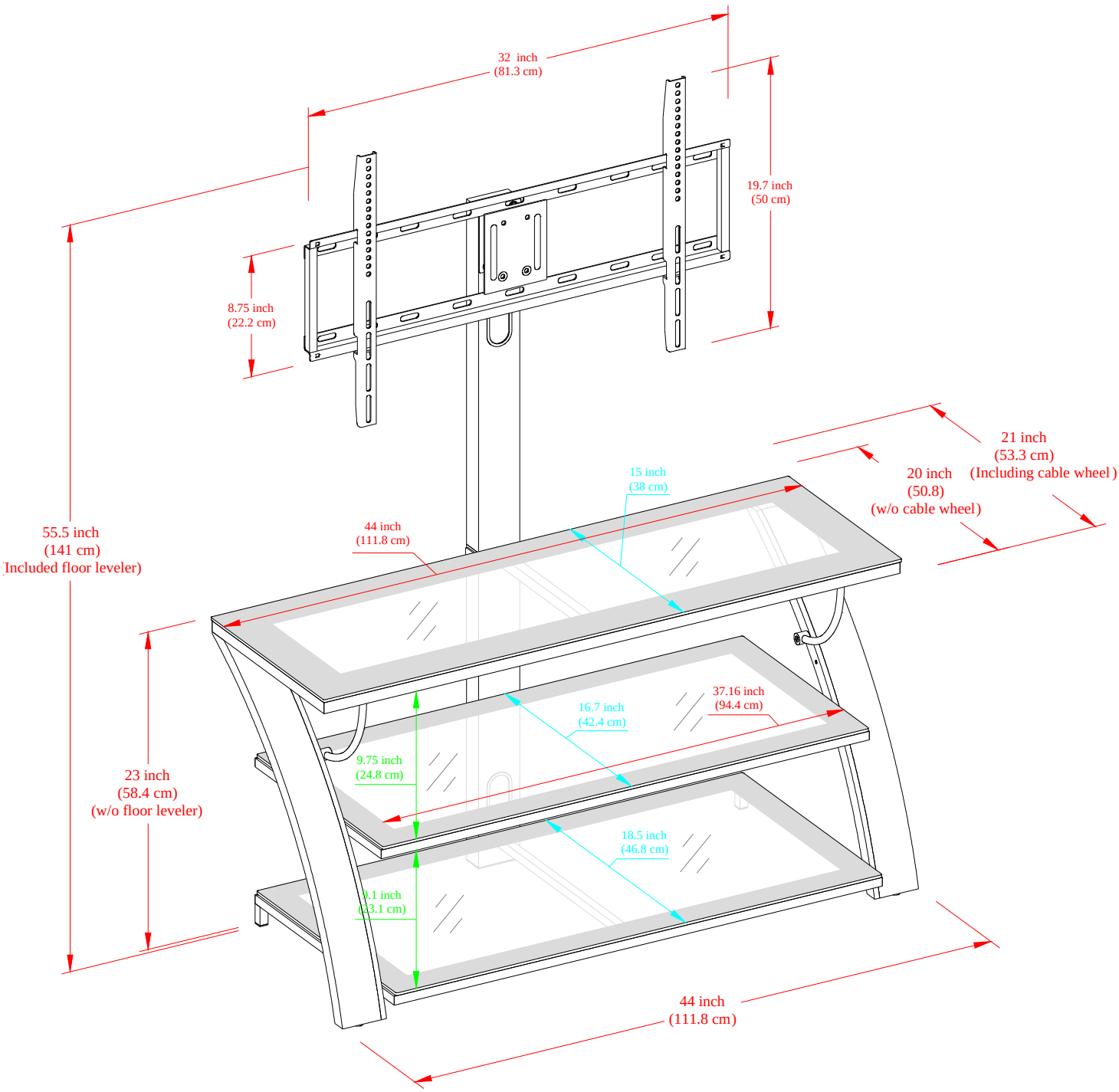
32 inch
(81.3 cm)
19.7 inch
(50 cm)
8.75 inch
(22.2 cm)
55.5 inch
(141 cm)
Included floor leveler)
21 inch
(53.3 cm)
(Including cable wheel)
20 inch
(50.8)
(w/o cable wheel)
15 inch
(38 cm)
44 inch
(111.8 cm)
37.16 inch
(94.4 cm)
16.7 inch
(42.4 cm)
9.75 inch
(24.8 cm)
23 inch
(58.4 cm)
(w/o floor leveler)
18.5 inch
(46.8 cm)
9.1 inch
(23.1 cm)
44 inch
(111.8 cm)