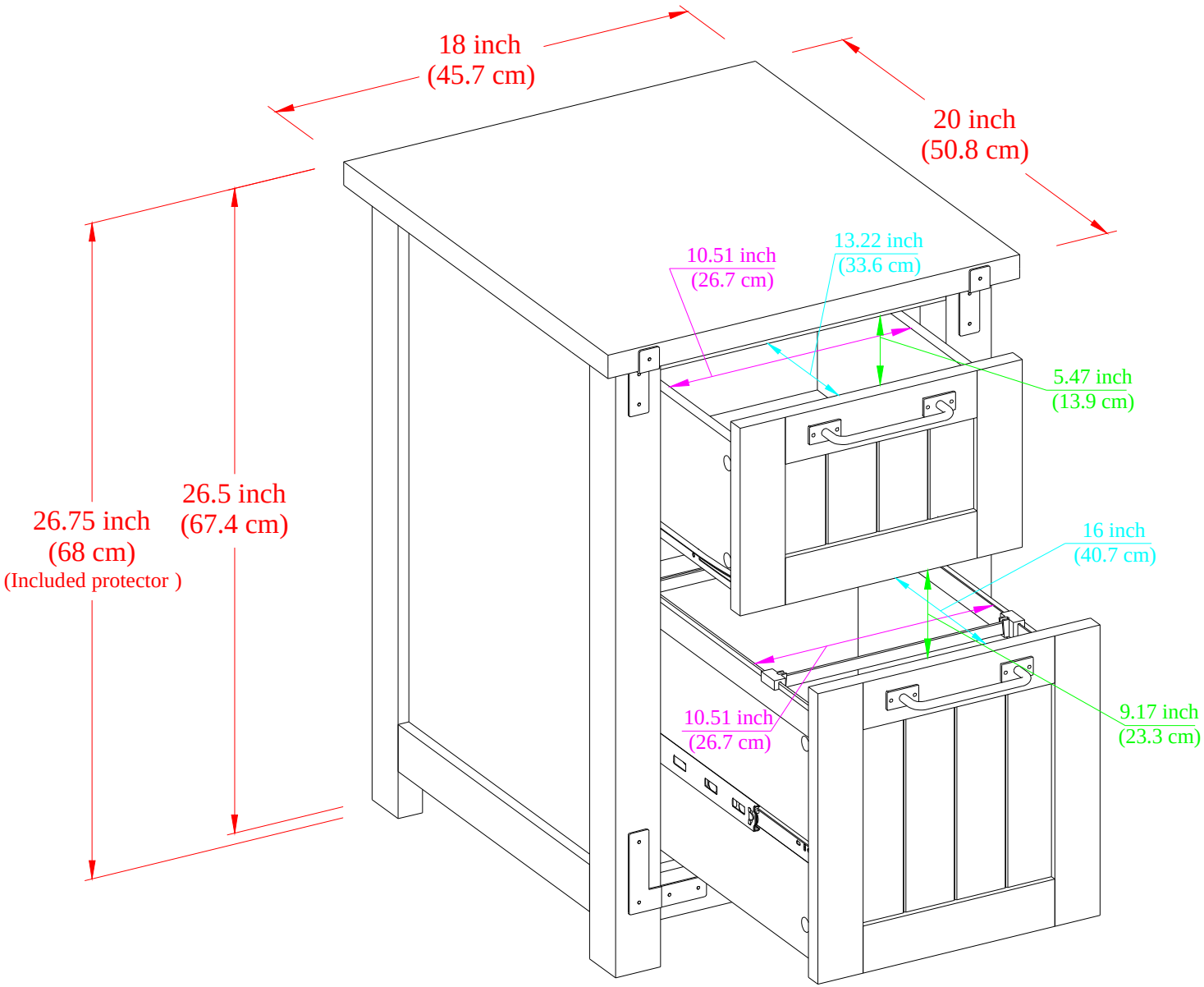
18 inch
(45.7 cm)
20 inch
(50.8 cm)
10.51 inch
(26.7 cm)
13.22 inch
(33.6 cm)
5.47 inch
(13.9 cm)
26.75 inch
(68 cm)
(Included protector)
26.5 inch
(67.4 cm)
16 inch
(40.7 cm)
10.51 inch
(26.7 cm)
9.17 inch
(23.3 cm)