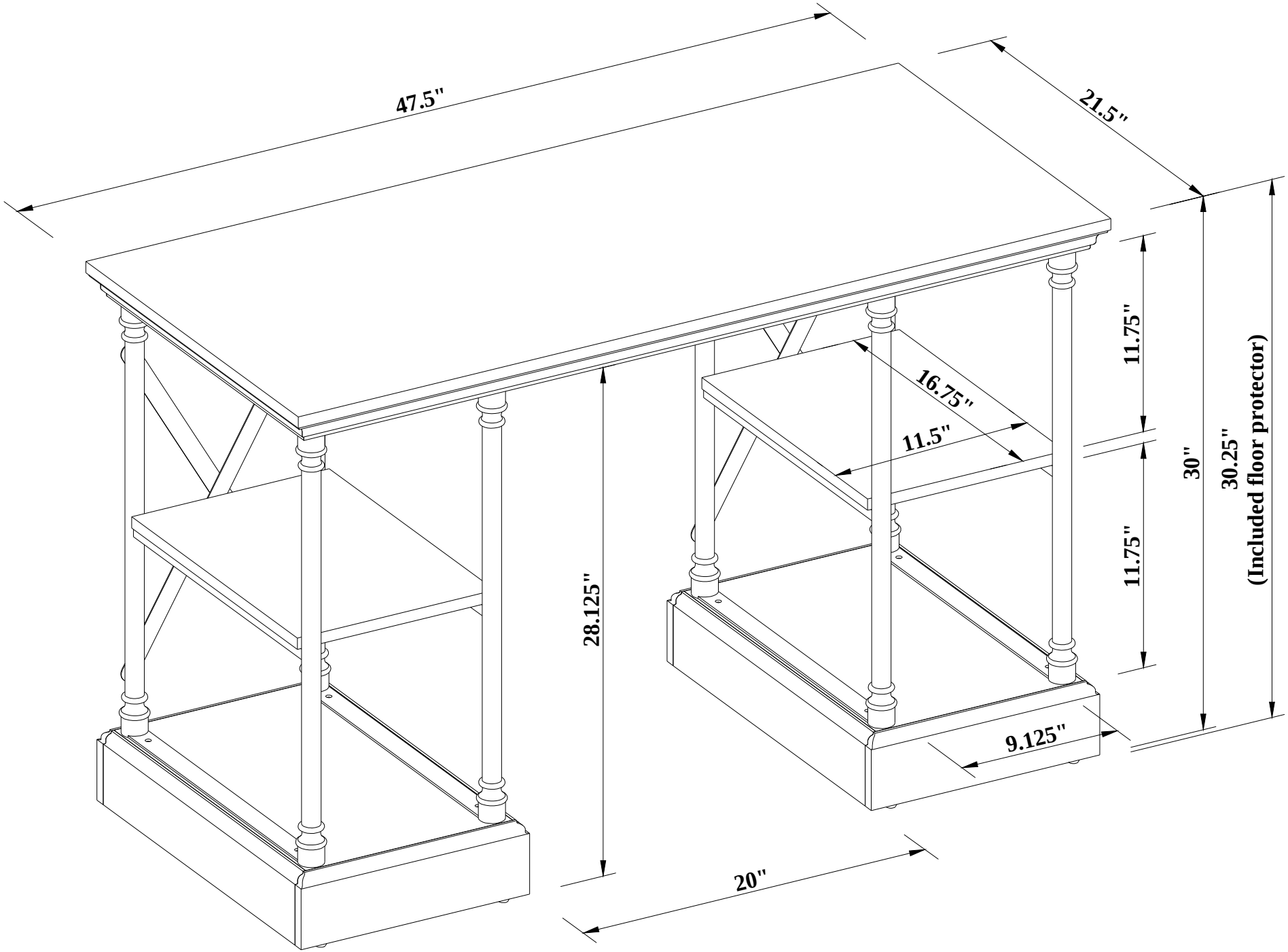
47.5"
21.5"
11.75"
16.75"
11.5"
30"
30.25"
(Included floor protector)
28.125"
11.75"
9.125"
20"