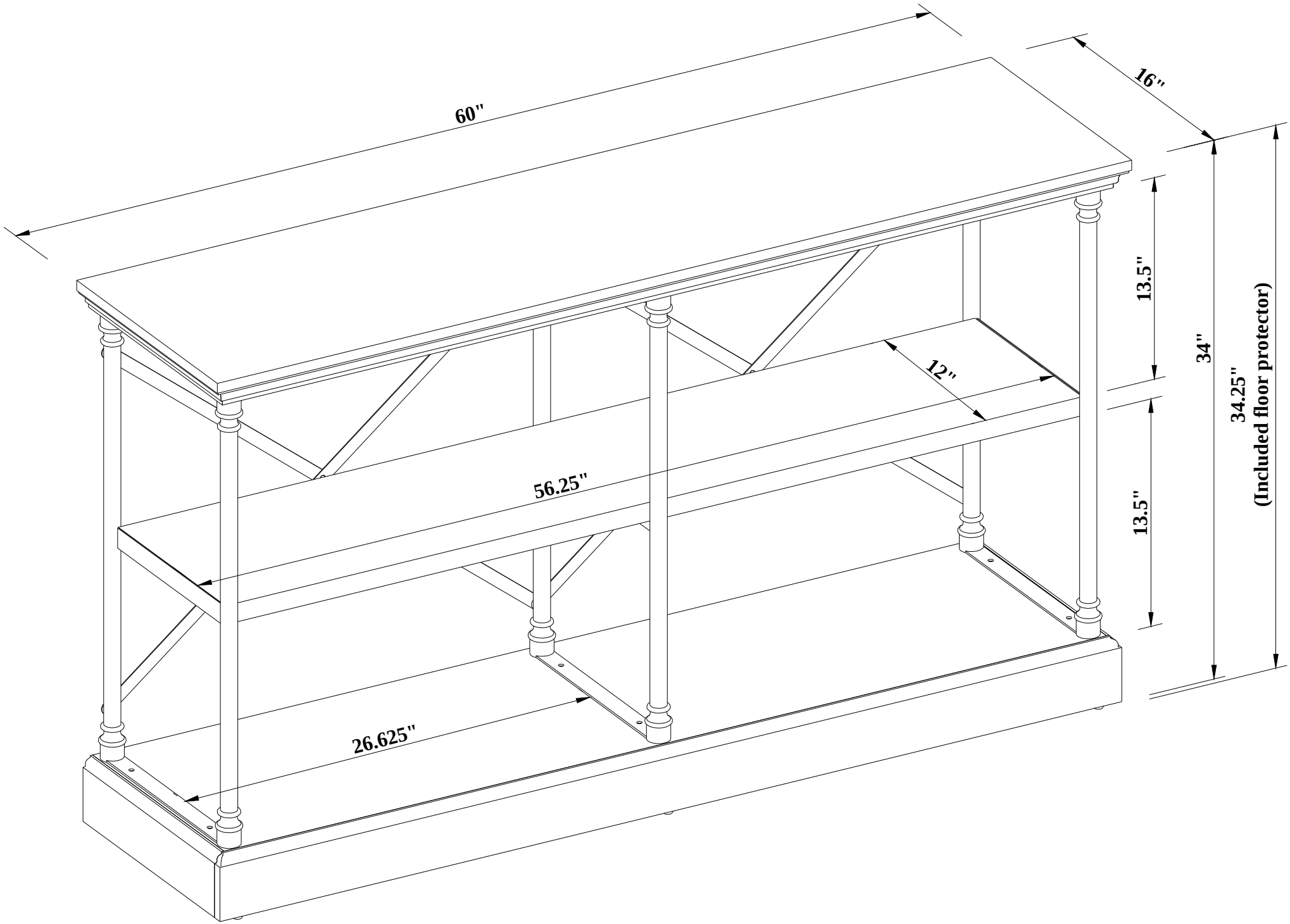
60"
16"
13.5"
34"
34.25"
(Included floor protector)
12"
56.25"
13.5"
26.625"