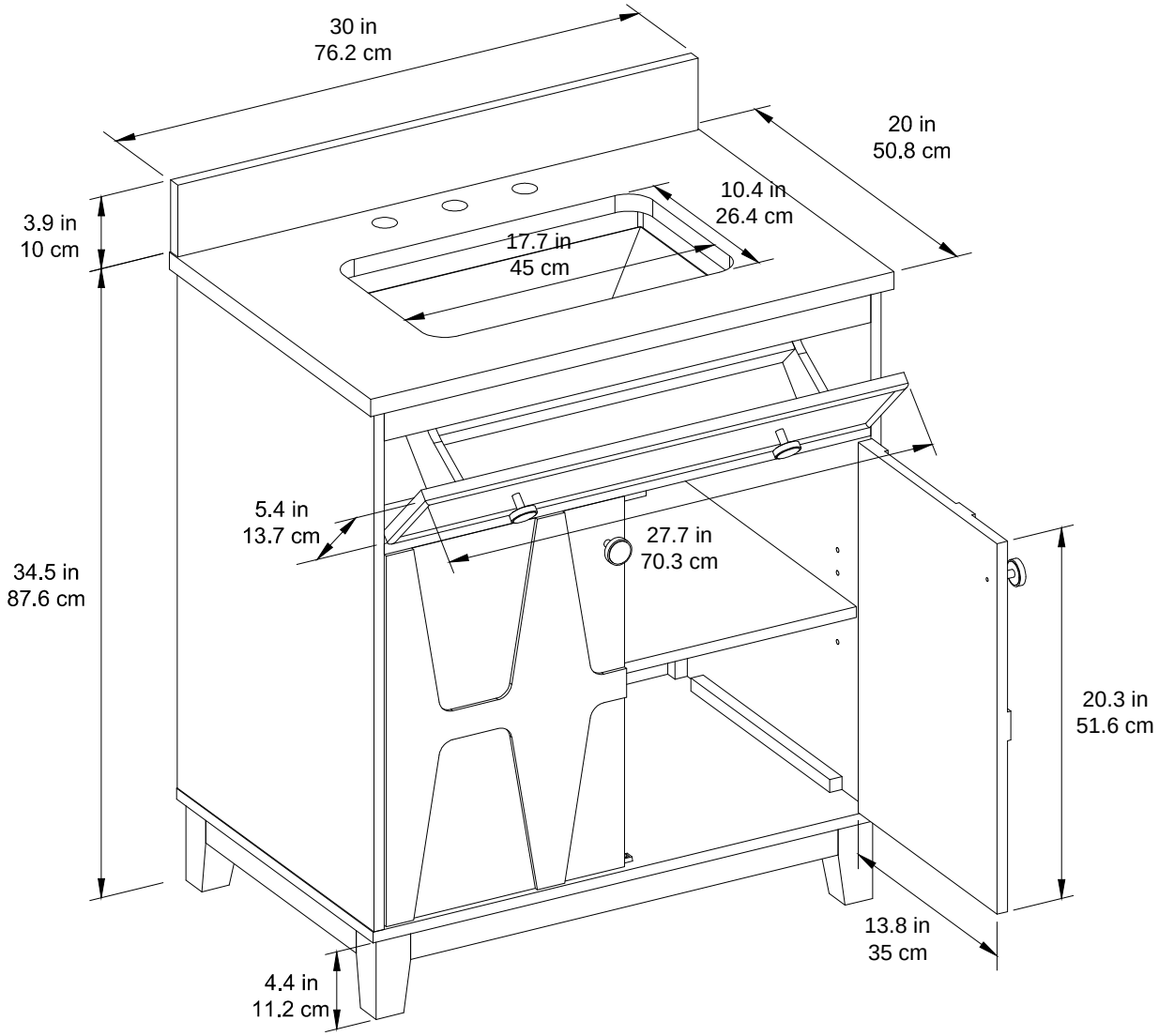
30 in
76.2 cm
20 in
50.8 cm
3.9 in
10 cm
10.4 in
26.4 cm
17.7 in
45 cm
5.4 in
13.7 cm
27.7 in
70.3 cm
34.5 in
87.6 cm
20.3 in
51.6 cm
13.8 in
35 cm
4.4 in
11.2 cm

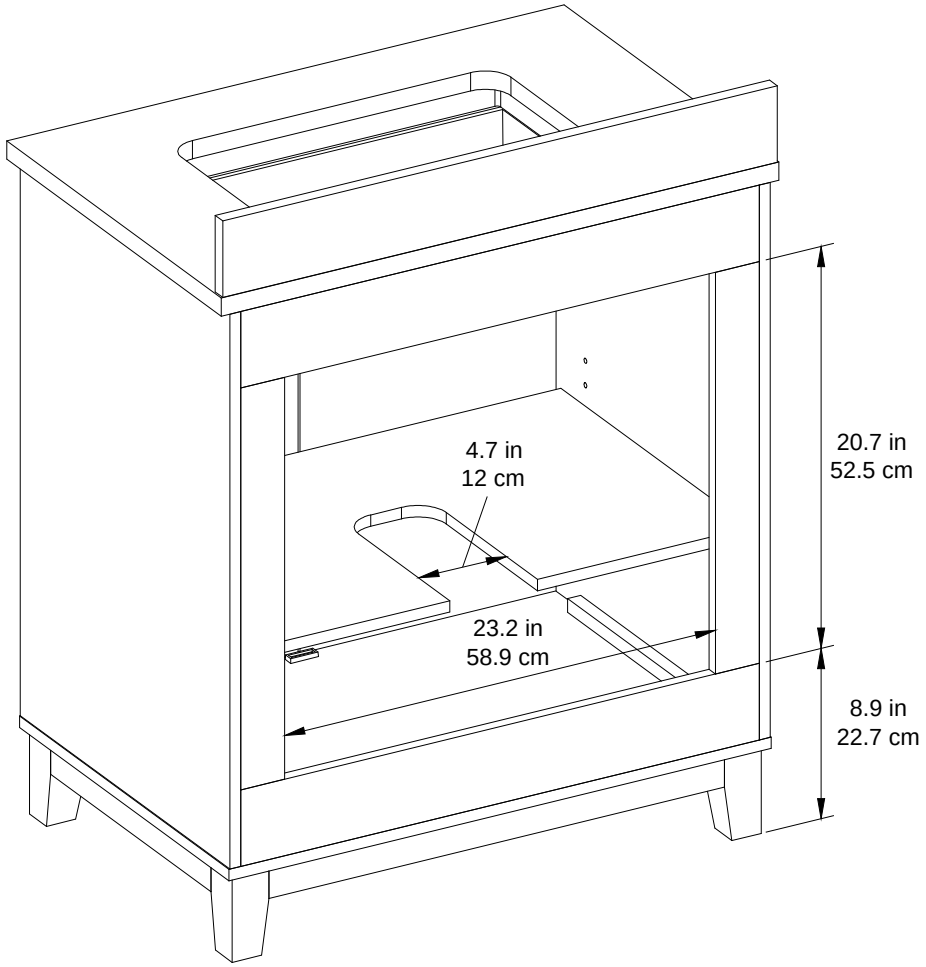
4.7 in
12 cm
20.7 in
52.5 cm
23.2 in
58.9 cm
8.9 in
22.7 cm